PROFILE OF A SUCCESSFUL ANALYSIS PROGRAM

Paul Boman, Director HSBI&I Co.
October 6, 2015

Risk Solutions

Munich RE

TOGA® for Electrical Equipment

Munich RE

- Transformers
  - Liquid Filled
  - Dry
  - Gas Filled
- Circuit Breakers
- Load Regulation
  - Load Tap Changer
  - Regulators

© 2015 The Hartford Steam Boiler Inspection and Insurance Company. All rights reserved. 8/25/2015

Transformers

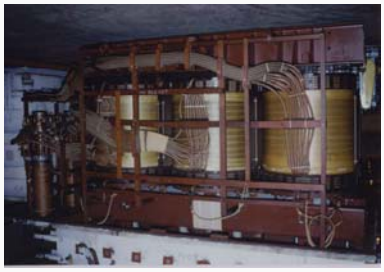

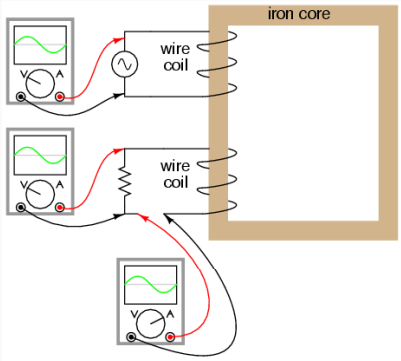

© 2015 The Hartford Steam Boiler Inspection and Insurance Company. All rights reserved.

TOGA® Transformer Failure Rate Comparison

Translates into Equipment Numbers

- ½% to 3% of all power transformers fail annually
- 1.5 of 1,000 (.15%) all TOGA Transformers Failed
  - Environmental causal factors
- 8 of 100,000 (.008%) TOGA Transformers Fail
  - Specific transformer faults

© 2015 The Hartford Steam Boiler Inspection and Insurance Company. All rights reserved. 6/10/2015 4

Catastrophic Failure Rates

Munich RE

Information from CIGRÉ Brochure 537 from A2.33

- Study Based on Canadian population of transformers
- Serious Failures at ½% to 1.4%
  - Within expected range of IEEE Survey
- Fire estimated at 5% to 15% of all Serious Failures
  - Higher than previously reported

© 2015 The Hartford Steam Boiler Inspection and Insurance Company. All rights reserved. 6/10/2015 5

Successful Analysis Programs Have …

Munich RE

- Consistent sample extraction
- Repeatable laboratory analysis
- Accurate result evaluation
- Follow-up of results

© 2015 The Hartford Steam Boiler Inspection and Insurance Company. All rights reserved. 8/25/2015 6

Dissolved Gas Analysis (DGA)

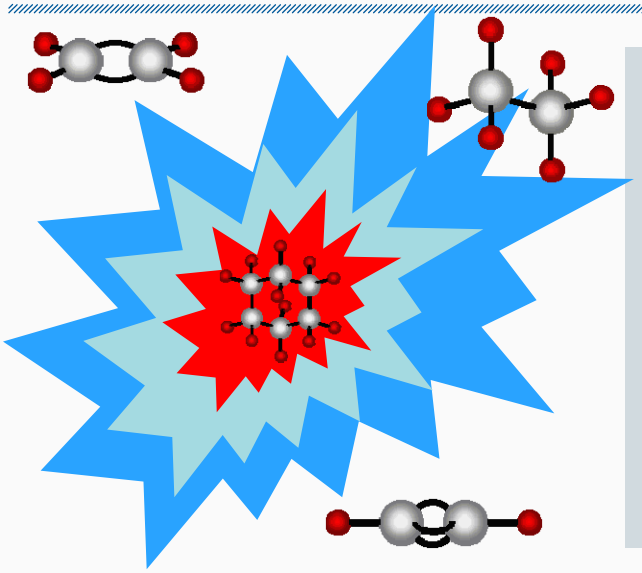

- Hydrocarbon Fluid exposed to energy produce gases
- Energy equates to temperature
- Gases produced based on temperature
  - Hydrogen
  - Methane
  - Ethane
  - Ethylene
  - Acetylene

© 2015 The Hartford Steam Boiler Inspection and Insurance Company. All rights reserved. 8/25/2015 7

Insulating Fluid Analysis

Routine	Non-routine
▪ Dissolved Gas Analysis (DGA)	▪ Oxidation Inhibitor
▪ Screen (Physical Properties)	▪ Furan (baseline)
▪ Dielectric Strength (ASTM D-1816)	▪ Corrosive Sulfur (baseline)
▪ Color	▪ Particles
▪ Acidity	▪ Metals in oil Spectroscopy (ICP-AES)
▪ Interfacial Tension	
▪ Specific Gravity	
▪ Power Factor @ 25°C	
▪ Dissolved Moisture	

© 2015 The Hartford Steam Boiler Inspection and Insurance Company. All rights reserved. 8/25/2015 8

Consistent Sample Method

- Sample Procedures
- Condition of Equipment
- Equipment On-line
  - Cleanliness

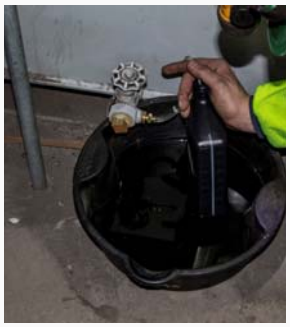

- Check for tank vacuum
- Flush bottle & syringe
  - Cleanliness
  - Timely processing

- DGA & moisture from syringe
- Screen tests from bottle
- Atmospheric contamination

© 2015 The Hartford Steam Boiler Inspection and Insurance Company. All rights reserved. 8/25/2015 9

TOGA® Insulating Fluid Sample Guidelines

- **New Fluid (Baseline Sample)**
  - **Full Sample Prior to Energized**
- **Establish Trend**
  - **Initial Sample Sequence**
    - **Monitors Equipment when Energized**
    - **24-hour, 48-hour and 72-hour DGA only Samples**
    - **1 week DGA , 1 month DGA, 3 month DGA, 6 month DGA**
- **Routine Sample Schedule**
  - **Unit Transformer - 6 month DGA, annual physical and dissolved moisture**
  - **Other Transformers - annual DGA, physical and dissolved moisture tests**

© 2015 The Hartford Steam Boiler Inspection and Insurance Company. All rights reserved. 8/25/2015 10

Explosion Hazard on a New Transformer found using TOGA® Sample Protocol

Munich RE

Dissolved Gas Analysis	02/11/2012
Hydrogen	6,277
Oxygen	1,822
Nitrogen	6,711
Methane	111,021
Carbon Monoxide	9
Carbon Dioxide	149
Ethylene	492,176
Ethane	91,767
Acetylene	2,993

Combustible Gases found by TOGA®	Flammability in Air	Flammability in Headspace
Hydrogen	281%	369%
Methane	478%	626%
Carbon Monoxide	< 1%	< 1%
Ethane	118%	155%
Ethylene	902%	1,182%
Acetylene	10%	13%
Total Flammability	1,790%	2,345%

© 2015 The Hartford Steam Boiler Inspection and Insurance Company. All rights reserved. 8/25/2015 11

PA Core Problem on a New Transformer

Munich RE

Dissolved Gas Analysis	02/11/2012
Hydrogen	6,277
Oxygen	1,822
Nitrogen	6,711
Methane	111,021
Carbon Monoxide	9
Carbon Dioxide	149
Ethylene	492,176
Ethane	91,767
Acetylene	2,993

Roger's Ratios Method	02/11/2012
R1 (CH_4/H_2)	17.69
R2 (C_2H_6/CH_4)	0.83
R3 (C_2H_4/C_2H_6)	5.36
R4 (C_2H_2/C_2H_4)	0.01
Diagnostic	Closest Fit; core ground
Other Important Ratios	
O_2 / (O_2 + N_2)	0.21

Duval Triangle Method	02/11/2012
% CH4	18.3%
%C2H4	81.2%
%C2H2	0.5%
Diagnostic Code	T2 Region,

Duval Triangle %CH4 Ratio =

CH4
---------- * 100
(CH4+C2H4+C2H2)

© 2015 The Hartford Steam Boiler Inspection and Insurance Company. All rights reserved. 8/25/2015 12

Natural Ester Case Study

Munich RE

Winding Electromagnetic Shield

Shielding Ground Conductor

© 2015 The Hartford Steam Boiler Inspection and Insurance Company. All rights reserved. 8/25/2015 13

Natural Ester Case Study

Munich RE

High Resistance Shield Connection

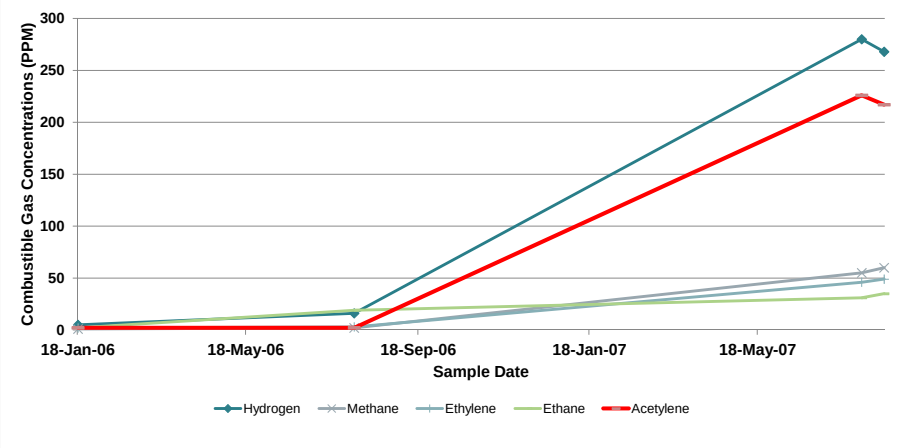

© 2015 The Hartford Steam Boiler Inspection and Insurance Company. All rights reserved. 8/25/2015 14

Natural Ester Case Study

Munich RE

High Resistance Shield Connection Duval Triangle Ratios

Ratios	31-Jul-07	16-Aug-07
% CH_4	0.6%	16.8%
%C_2H_4	14.1%	15.0%
%C_2H_2	69.1%	66.6%
Diagnostic Code	Discharges of Low Energy D1	Discharges of Low Energy D1

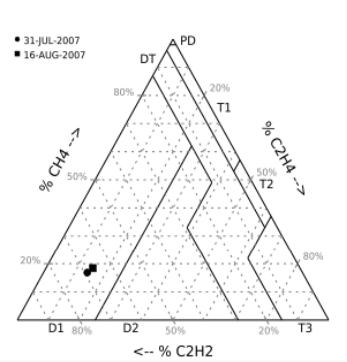

© 2015 The Hartford Steam Boiler Inspection and Insurance Company. All rights reserved. 8/25/2015 15

THANK YOU VERY MUCH
FOR YOUR ATTENTION

Paul Boman, paul_boman@hsb.com, +001.785.256.7161
October 6, 2015

Risk Solutions

Munich RE